This document copyright 1998, 1999 by Tandem-Flow Systems, Ltd.
All rights reserved

Continuous Towel Processing Machine
Table of Contents

Start-up procedure ..... Page 2
Operator's Instructions ..... Page 3
Shut-down procedure ..... Page 4
Routine maintenance (weekly) ..... Page 5
Monthly service ..... Page 6
Six-month service ..... Page 7
General description of machine ..... Page 8
Towel feed and Dry Feed Hopper ..... Page 9
Main Wash Assembly ..... Page 10
J-Box Soak Tank section ..... Page 10
Wash and Rinse section ..... Page 11
Drying drum section ..... Page 13
Clean towel accumulator and rewind section ..... Page 14
General information ..... Page 15
Fault finding and correction ..... Page 17
Threading diagrams ..... Page 24
Parts description ..... Page 27

This document copyright 1998, 1999 by Tandem-Flow Systems, Ltd.
All rights reserved

Start-up Procedure

10-15 minutes before starting machine:

1) Check that the J-BOX SOAK TANK and PUMP WATER TANK are full of water and soap solution
2) Turn on main steam valve SLOWLY
3) Turn on steam to pump water tank (hand valve on front of steam section)
4) Turn on power to machine
5) Turn on steam to drying drums (electrical switch on operator's panel)

5 minutes before starting machine:

1) Check that the steam pressure on the drying drums is correct for towels to be run. When the steam pressure has been stable and correct for 5 minutes, check that the pump water tank has reached the correct temperature for washing.
2) Once the pump water tank temperature is correct, the machine is ready to start washing.

Starting the machine:

1) Ensure that the machine is set to AUTOMATIC operation (Hand/Auto switch on operator's console set to AUTO)
2) Press the RESET button on the operator's console to start the Common Motor
3) Ensure that the Dry Feed Hopper and J-Box are full of towels
4) Use the REWIND assembly to empty the stacker chute of clean towels
5) Check that the guillotine is at the top of its travel
6) Press the MAIN ON button to begin processing towels.

After starting:

1) Check for proper detergent flow
2) Check pump pressure 140 - 160 p.s.i. (9.5 to 10.5 on gauge)

This document copyright 1998, 1999 by Tandem-Flow Systems, Ltd.
All rights reserved

OPERATOR'S INSTRUCTIONS

Ensure that correct start-up procedure has been carried out.

Press RESET button to start Common Motor

Press TOWEL FEED ON button and allow towel to feed into Dry Feed Hopper

(The above steps may not be necessary if the machine has been left "ready to run")

Place soiled towel in soiled towel bin. Line up leading edge of this towel with the trailing edge of the previous towel. Sew straight across the two towels, 2 to 2.5 inches down from the end, to give an ordinary open seam. Continue to sew 1/2" past the edge of the towels without pulling the towel, when a single thread will develop. Pull the towels down to lead the thread into the cutters on the sewing machine, while releasing the foot switch.

WARNING: A towel fed in twisted will come out twisted. A torn towel may well break in the machine, wasting production time.

Press the towel feed start button and allow the towel to feed into the Dry Feed Hopper and J-Box Soak Tank. Continue to feed towels until J-Box Soak Tank is full.

Press the REWIND ON button to empty the stacker chute of clean towels. Check that the guillotine is at the top of its travel, then press the MAIN ON button. The machine will start and continue to run.

When the Rewind Mandrel stops, strip the stitch on the clean towel. Press the foot switch to eject the clean towel onto the Third Arm shaft. Wrap the end of the next clean towel around the Rewind Mandrel and press the REWIND ON button to begin rolling the next towel.

While the clean towel is winding up, feed another soiled towel into the Dry Feed Hopper. After it starts feeding, removed the previously-ejected towel from the Third Arm shaft.

Continue clean towel removal and soiled towel feeding as normal.

If it is necessary to stop the machine for an extended period of time (more than 4 minutes), the steam supply to the Drying Drums should be switched off using the steam switch under the plastic cover of the operator's panel.

NOTE: When restarting after an interruption such as this, it is necessary to again make sure that the correct steam pressure has been maintained for 5 minutes.

This document copyright 1998, 1999 by Tandem-Flow Systems, Ltd.
All rights reserved

SHUTTING DOWN PROCEDURE

1) Switch off the machine by pressing the large red EMER STOP button
2) Turn off steam to Drying Drums using the STEAM switch (under the plastic cover on the operator's console)
3) Turn off power to machine
4) Close steam valve for Pump Water Tank (valve at front of steam section)
5) Close main steam valve
6) Clean filter with soft brush, checking screen for damage
7) Drain Pump Water Tank (large lever valve at bottom of tank)
8) Flush out and clean Pump Water Tank with hose, close drain valve and refill with water to overflow level
9) Clean out waste lint basket
10) Check level of detergent in soap tank
11) Record number of towels processed, then reset counter to ZERO.

This document copyright 1998, 1999 by Tandem-Flow Systems, Ltd.
All rights reserved

ROUTINE MAINTENANCE

Weekly

1) Clean spray jets
2) Clean and check over sewing machine, paying particular attention to the needle and thread cutter. Lightly oil sewing machine, using the built-in oiler
3) Visually inspect all working parts, paying particular attention to the bearings of the Rinse Section Pressure and Bolster rollers
4) Lubricate Rotary Union Assemblies (2) on Drying Drums sparingly with high temperature grease
5) Clean machine of lint, dust, fluff and excess grease
6) Check that all safety switches operate freely and correctly
7) Clean photocells of Towel Alignment Assembly and Soiled Towel Bin with clean, dry cloth
8) Inspect filter screen for holes or tears
9) Fill Soap Tank
10) Check all rollers for free movement

This document copyright 1998, 1999 by Tandem-Flow Systems, Ltd.
All rights reserved

MONTHLY SERVICE

(or every 150 hours if run more than 150 hours per month)

Switch off power to machine

Perform all items on Weekly Maintenance checklist

Clean machine thoroughly

Lubricate the following points:

Machine Section	***Parts to lubricate***	***Number of points***	***Lubricant***
Dry Feed Hopper	Bolster and Pressure Roller Bearings	6	Grease
	Chain	2	Oil
	Common Motor Gearbox, Check oil level	1	Gear oil
Wash and Rinse Section	Bolster Roller Bearings	8	Grease
	Pressure Roller Bearings (check seals for tears)	8	Grease
	Chain	2	Oil
	Idler sprockets	3	Grease
	Main Drive Motor, Check oil level	1	Gear oil
Drying Drum Section	Long and Short Guide Rollers	20	Grease
Stacker Drive Section	Bolster and Pressure Roller Bearings	4	Grease
Rewind Section	Rewind Mandrill bearings	6	Grease
Filter	Motor Bearings	2	Grease
(See Filter manual for Grease requirements)	Vibrator Shaft Bearings	2	Grease
Wash Pump	Pump Bearing, Check oil level	1	Oil

Check Drying Drums for excessive scale and dried soap, cleaning as necessary.

Reduce number of towels in J-Box Soak Tank, drain water and flush out.

This document copyright 1998, 1999 by Tandem-Flow Systems, Ltd.
All rights reserved

6 Month Service

(or 900 hours)

Repeat MONTHLY SERVICE, and continue with the following items

Machine Section	***Parts to Lubricate***	***Number of points***	***Lubricant***
Drying Section	Repack Drying Drum Bearings	4	Grease, High Temperature
Wash Pump	Motor Bearings	2	Grease
General	Drain and refill gear boxes:	2	Gear Oil
	(1) Main Drive Motor		
	(1) Common Motor		
	Inspect all rollers and moving parts for wear and damage		
Sewing Machine	Check motor brushes, replace as necessary		
Rewind	Check clutch for wear and adjust tension as necessary		
	Mandrel Bearings	3	Grease

Always keep the machine as clean as possible. This enables quick visual inspection of all working parts to be made, and prevents rapid wear.

This document copyright 1998, 1999 by Tandem-Flow Systems, Ltd.
All rights reserved

GENERAL DESCRIPTION OF MACHINE

The machine consists of five main sections:

1) Soiled Towel Bin, Towel Feed and Dry Feed Hopper
2) J-Box Soak Tank, Wash and Multi-stage Rinse
3) Drying Unit
4) Dry (clean) storage and Rewind Unit
5) Filter

Once the machine has been correctly "laced" or "threaded" with towels (see figures 1 through 4 at the end of this section), and the J-Box Soak Tank is filled with 6 to 7 40-yard towels, the sequence of operations is as follows:

On the operator's console at the front of the machine, there are two distinct sets of control buttons. The six sets mounted at the top of the console are the normal operating controls, and are marked as follows:

1) Main START / STOP
2) RESET / EMER. STOP
3) Towel Feed START / STOP
4) Rewind START / STOP
5) Steam
6) Clutch Tension

Additionally, there are two foot-operated switches on the floor. The foot switch mounted under the sewing machine controls the sewing machine, while the one mounted to the right of the operator console controls the towel eject cylinder.

On the side of the main power control box, there are the following additional controls, which are normally used only for start-up or maintenance:

1) Main Drive START / STOP
2) Pump START / STOP
3) MANUAL / AUTO

This document copyright 1998, 1999 by Tandem-Flow Systems, Ltd.
All rights reserved

TOWEL FEED AND DRY FEED HOPPER

Towel Feed

A soiled towel is placed into the Soiled Towel Bin. Using the Sewing Machine (which has been modified to give a quick release stitch), the leading edge of the soiled towel is sewn onto the trailing edge of the previous towel.

Once the two towels have been joined and the stitch checked for straightness and flatness (see OPERATOR'S INSTRUCTIONS on page 3), the Towel Feed ON button is pressed, and the towel feeds into --

Dry Feed Hopper

The Soiled Towel Bin is equipped with a photocell sensor to automatically stop the towel feed when the trailing edge of the towel passes by the photocell beam. The Towel Feed START button will not operate the towel feed until another soiled towel is in the bin, blocking the photocell beam.

The feed-in to the hopper, which holds approximately 5 towels, is made between metal Common Bolster Roller and the rubber Dry Feed Pressure Roller. Both rollers have grooves around their circumference, through which "stripper" bars pass that insure towels feed into the hopper and do not stick to either roller. The metal roller, driven by the Common Motor, runs constantly. The rubber pressure roller is pushed against the metal roller as necessary by an air cylinder, controlled by a solenoid valve that is activated by the Towel Feed START and STOP buttons.

The Towel Bin Photocell is wired to stop the feed at towel end. The Towel Feed STOP button can also be used at any time by the operator, to stop the feeding of the towel to allow for straightening of twisted towels or any other reason.

Between the Soiled Towel Bin and the feed roller of the Dry Feed Hopper, the soiled towel passes over a specially-shaped plate, which serves the dual purpose of providing enough tension during the feeding and helping to eliminate creasing.

At the front of the Dry Feed assembly is a hinged cover to protect the operator from injury by the pressure roller assembly. When this cover is opened, a safety switch prevents the machine from being started.

WARNING: Allow a few seconds for roller rotation to cease before putting hands or clothing near rollers!

This document copyright 1998, 1999 by Tandem-Flow Systems, Ltd.
All rights reserved

MAIN WASH ASSEMBLY

The Main Wash Assembly consists of:

1) A J-shaped tank (with one sloping and one vertical portion), a J-Box Pressure roller driven by the Common Bolster Roller to pull towels out of the Dry Feed Hopper and push them into the J-Box. The J-Box Pressure Roller is pushed against the Common Bolster Roller whenever the J-Box is able to accept towels. A set of stainless steel "fingers" actuate a valve to release the J-Box Pressure Roller when the J-Box is full
2) A Wash Box section, consisting of 20 high-pressure spray jets mounted to two manifolds, and two perforated rollers for the towel to ride on.
3) An inclined, 4-stage rinse/extraction section, utilizing 6 spray jets to introduce clean water.

Each will be discussed in detail on the following pages.

The J-Box Soak Tank

Soiled towels are pulled out of the Dry Feed Hopper, over several stainless steel bars and through a rubber tensioning assembly, and pushed into the J-Box for soaking. This is done by a mechanism identical to the Dry Feed Hopper's. A set of stainless steel "fingers" are mounted at the entrance to the J-Box itself, and operate a valve when the J-Box reaches the proper fill level. This valve releases the air pressure on the J-Box Pressure Roller, stopping the feed.

The J-Box Soak Tank is designed to hold approximately 6 to 7 40-yard towels. It is important that operator feed towels into the machine at a rate to allow the J-Box to maintain this level, to reduce or eliminate towel twisting. If towels aren't fed into the machine fast enough, the J-Box Feed Roller can and will pull the end of the towel out of the Dry Feed Hopper, necessitating shutdown of the machine for rethreading.

The Dry Feed Hopper and J-Box Feed rollers operate at a higher speed than the wash section, to allow the operator time to keep ahead of the machine.

At the exit of the J-Box Soak Tank, there is a bar and roller that the towel passes over to provide tension and straightening of the towel as it passes through the wash section.

This document copyright 1998, 1999 by Tandem-Flow Systems, Ltd.
All rights reserved

WASH AND RINSE SECTION

Wash Section

The wash section consists of the high pressure wash jets and manifold, and the perforated rollers the towel rides on. The two removable manifolds, with 10 jets each, are held into the wash section by two tapered screws, which press the spray jet manifolds against the seals of the manifold.

The perforated rollers ride on two plastic bushings each, on a shaft that is bolted to the side of the wash box. These rollers provide support for the towel as the spray hits it, to allow for maximum cleaning without damaging the towel. The wash solution then feeds by gravity into the filter, then into the Pump Water Tank, to be heated and recycled.

After washing, the towel feeds through a narrow slot, designed to control overspray, into the rinse section.

Rinse Section

The rinse section consist of an inclined ramp, with 4 sets of pressure extraction rollers. These sets consist of a metal roller, driven by the Main Drive Motor, and a free-running rubber pressure roller, which is pushed against the metal roller by two air cylinders, mounted above. These air cylinders are operated by a push/pull valve, mounted to the Rinse Section at the base of the bearing tray. There is a pressure switch connected to the cylinders to prevent starting of the machine if the rollers are in the up (disengaged) position.

Between the two upper-most pairs of rollers, there are three sets of spray jets, fed by the incoming water supply. These jets provide clean water for the last three rinses of the towel. This water then flows by gravity down to the filter, where it is reused.

Automatic Towel Break Switch

The towel, after passing through the last pressure roller of the Rinse section and before going onto the Drying section, passes between a set of guillotine rollers. If the towel breaks, the moving guillotine roller will drop and activate the safety switch. This will shut off the machine, and will not allow it to be restarted until the guillotine is raised again.

This document copyright 1998, 1999 by Tandem-Flow Systems, Ltd.
All rights reserved

Water Flow

Fresh water is introduced to the machine through a solenoid valve and the spray jets mounted in the rinse section, between rollers 2 & 3 and 3 & 4. The solenoid valve is controlled by the MAIN ON switch, and is on only when the machine is running in automatic mode.

This water is extracted from the towel by the pressure rollers, and flows downward to be reused for rinsing between rollers 1 & 2 and between roller 1 and the wash section. It eventually makes its way to the filter, and from there into the Pump Water Tank. This water provides the source of clean water to the machine, and excess water flows out an overflow pipe, into the waste water drain. At the same time, a thermostatic steam valve regulates the introduction of steam through special jets to heat the water to normal operating temperature, usually between 150º and 180º F.

Water is taken from the Pump Water Tank by the Wash Pump. It then flows to the high pressure spray jets of the Wash Section, through the filter, and back into the Pump Water Tank. The jets are adjusted to provide some overspray to the J-Box Soak Tank, to keep it full (the movement of towel takes water out of the J-Box).

Detergent flow

Chemical solutions are introduced to the J-Box Soak Tank at the end closest to the operator, so that the strongest solution is at the point where the towel enters the J-Box. The flow of towels moves this solution throughout the machine, and the spray action of the Wash Section transfers the chemicals into the Pump Water Tank.

This document copyright 1998, 1999 by Tandem-Flow Systems, Ltd.
All rights reserved

DRYING DRUM SECTION

The two drying drums are free running. The towel moves around on them, drawn by the Stacker Drive roller, located at the bottom of the Drying Drum frame. The towel is guided from one drum to the other by means of full-width 3” diameter rollers. The layout of these rollers causes the towel to flip over as the towel travels from one drum to the other, so that the towel dries evenly. The towel is moved sideways across the pair of drums by two diagonal rollers at the back of the machine.

Steam should be applied to the main steam connection at 100 to 150 p.s.i. (6.8 to 10 Bar). The steam branch feeding the Drying Drums is fitted with a pressure regulator, which is adjusted to the desired steam pressure (not to exceed 80 p.s.i.). A safety valve, set to 100 p.s.i. (6.8 Bar), prevents over-pressuring the Drying Drums. A gauge on the front of the steam section displays the pressure in the Drying Drums. A solenoid valve, controlled by the Steam switch on the Operator’s Console, turns the supply of steam to the Drying Drums on and off, as needed.

SPECIAL NOTE: Whenever the steam to the Drying Drums has been turned off, the machine must NOT be started again until the steam to the drums has been turned on, and the operating pressure has been maintained for at least 5 minutes. Failure to follow this procedure will result in water-logged drums, which will cause problems with drying and machine operation.

Stacker Drive

The Stacker Drive section consists of a metal roller, driven by a chain and shaft from the Main Drive Motor, and a rubber pressure roller, which is pressed against the metal roller by an air cylinder. This air cylinder is controlled by a push-pull valve and regulator that is attached to the right side of the unit, between the Stacker Drive and Drying Drum sections. The metal roller is driven whenever the Main Drive is operating.

After leaving the last turn of the Drying Drums, the towel passes into the Stacker Drive unit. It then is pushed into the stacker chute, for storage and grading.

This document copyright 1998, 1999 by Tandem-Flow Systems, Ltd.
All rights reserved

CLEAN TOWEL REWIND SECTION

Accumulator

After passing through the Stacker Drive, the towel feeds into the stacker chute. While the Rewind Mandrel is not running, clean towel is being constantly fed into the chute. If allowed to overfill, towels will fall out of the unit onto the floor, which can cause problems with re-rolling, as well as possibly soiling the towels again. Prior to starting the machine in automatic operating, the stacker chute should be emptied.

The clean towel is pulled out of the stacker chute over several rollers, through a rubber drag plate, and over several metal bars, to straighten the towel and provide needed tension for the Towel Alignment Assembly to function. This also provides an area where the operator can grade the towel being re-rolled.

Towel Edge Alignment Unit (Wiggle-Woggle)

The Towel Alignment unit is situated just below the Rewind Mandrel, and consists of a horizontal bar, mounted to a pivoting yoke, which enables the bar to move out of parallel with the Rewind Mandrel in both directions. The edge of the towel is sensed by a photocell, which activates a solenoid valve. This valve controls an air cylinder, which tips the bar to one side or the other, as needed, to keep the edge of the towel close to the edge of the photocell's sensing range.

Clean Towel Rewind Mandrel

The Rewind Mandrel is driven through a magnetic clutch by chain from the Common Bolster Roller, and ultimately by the Common Motor, located atop the J-Box. The clutch is engaged by the REWIND ON button on the Operator's Console, and is disengaged automatically when the join between two towels passes over the Towel Alignment unit's sensor switch. It can also be stopped by pressing the REWIND OFF switch.

The quick-release stitch is then stripped out of the towel join, and the towel is ejected from the Mandrel by stepping on the Towel Eject foot switch. This switch operates a solenoid valve, which activates an air cylinder to push the rolled towel off the Mandrel. The end of the next towel is then wrapped around the Mandrel, and the Rewind START button is pressed again, to roll the next towel up.

The magnetic clutch is set to provide a torque sufficient to rewind the towel, while not putting too much stress on the towel when the stacker chute is empty. Too much tension will cause clutch damage.

This document copyright 1998, 1999 by Tandem-Flow Systems, Ltd.
All rights reserved

GENERAL INFORMATION

Approximate Tank Capacity

	Gallons	Liters
Pump Water Tank	80	365

Temperatures

	ºF	ºC
Pump Water Tank	160-180	70-80

Steam Pressures

	PSI	BAR
Supply Pressure	100-150	6.8-8
Drying Drum Pressure	50-80	3.5-5.5

Air Pressures

	PSI	BAR
Supply Pressure (minimum)	90	6.2
Dry Feed and J-Box Pressure Rollers	40	2.7
Rinse Section Pressure Rollers	70	2.7
Stacker Drive Pressure Roller	20-60	1.3-4.1
Towel Alignment Assembly	40	2.7

Note that the minimum supply pressure quoted is the minimum running pressure. Inadequately-sized supply pipes will cause faulty machine operation, even if the “no load” pressure is in excess of the minimum quoted.

This document copyright 1998, 1999 by Tandem-Flow Systems, Ltd.
All rights reserved

FAULT FINDING AND CORRECTION

General

Symptom	***Action***
Machine will not start	Check that electrical supply to machine is ON
	Check that air, water and steam supplies are ON
	Check that front cover and Stacker Drive cover are properly closed
	Carry out Start-up Procedure. If machine still does not start, switch off power, then:
	Check Towel Break Switch (see “Guillotine” section following)
	Check that Guillotine is at its top position. If not, release Stacker Drive pressure roller using override valve, then pull sufficient towel through Drying Drum section to raise Guillotine. Pull this towel into the Stacker Chute, then pull Stacker Drive override valve to the RUN position.
	Check all three override valves are in the RUN position (see “Main Drive” section following)
	Check water level in Pump Water Tank (minimum 15 inches to start)
Towels will not feed into Dry Feed Hopper	Check that common motor is running (see “Dry Feed Hopper/J-Box Feed” section following)
Towel Feed does not stop at end of towel automatically	Check that photocell in Soiled Towel Bin is clean (see “Dry Feed Hopper/J-Box Feed” section following)
Towel Rewind does not stop at towel splice automatically	Check setting of Towel End Safety Switch (see “Rewind” section following)
Towel Rewind too slow	Check setting of clutch tension potentiometer (see “Rewind” section following)
Towel Rewind Mandrel does not turn	Check Common Motor and Rewind Clutch (see “Rewind” section following)
Towel break does not stop machine	Check that Guillotine falls freely
	Check Towel Break safety switch at base of Guillotine
	See “Guillotine” section following

This document copyright 1998, 1999 by Tandem-Flow Systems, Ltd.
All rights reserved

Symptom	***Cure***
Towel Alignment unit (wiggle-woggle) not working correctly	Check that photocells are clean
	See "Rewind" section following
Towel creasing, wandering or breaking	Check that all controls are set correctly, Steam is ON, and all air pressures are set correctly (see chart on page 15)
	Check operation of machine, including straight stitching of towels and that towels are fed flat
	Check threading of machine
	Check number of towels in Dry Feed Hopper and J-Box (see "Dry Feed Hopper/J-Box Feed" section following)
	Check all rollers for dirt, lint, etc. which might interfere with their turning freely
	Check for obstructions in J-Box
	Check water levels in both J-Box and Pump Water Tank
	Check for blocked spray jets in Wash Box
	Check that perforated rollers in Wash Box are free to turn
	Check that stacker drive is free to turn
	Check that drying drum bearings are free to turn
Poor washing or rinsing	Check correct soap mix and flow rate
	Check for blocked jets and jet alignment in Wash Box
	Check pump pressure
	Check wash tank temperature
	Check Rinse water flow rate
	Check for blocked jets in Rinse section
	Check Rinse water temperature

This document copyright 1998, 1999 by Tandem-Flow Systems, Ltd.
All rights reserved

Symptom	***Cure***
Towels not drying	Check steam pressure to Drying Drums
	Check Drying Drums for water logging (see “Steam Supply” section following
	Check Drying Drums for excessive scale or soap build-up
	Check Rinse water temperature
	Check for correct air pressure on Rinse Section pressure rollers (see “Rinse Section” following)

This document copyright 1998, 1999 by Tandem-Flow Systems, Ltd.
All rights reserved

FAULT FINDING AND CORRECTION

By Section

Area/Symptom	***Problem***	***Cure***
Towel Bin		
Towel does not stop at end	Photocell lens dirty	Clean photocell and reflector with soft, damp cloth
	Photocell relay defective	Replace photocell relay
	Photocell defective	Replace photocell
	Reflector broken or missing	Replace reflector
Dry Feed Hopper / J-Box Feed		
Towel will not feed in	Pressure roller not extending	Verify that solenoid valve is operating. Check air pressure
	Pivot bushings worn out	Replace pivot bushings
	Stripper bars loose	Adjust stripper bars and retighten set screws
	Lint built up on feed rollers	Clean rollers and bearings
	Common motor not turning	Check that all safety switches are clear. Close any open covers.
		Check overload contacts on all motor contactors. Eliminate any overloads found, reset overload contacts.
Towel does not transfer from Dry Feed Hopper to J-Box	J-Box Full valve pushed in	Check operation of J-Box fingers and J-Box Full valve.
Towels too tight leaving J-Box	Not enough towels in J-Box	Check count of towels in J-Box by feeding an odd-colored towel in, then counting how many towels come out before the odd-colored towel. There should be 6 to 7 40-yard towels in the J-Box
	Obstruction in J-Box	Drain J-Box and inspect through front cover and/or inspection window.

This document copyright 1998, 1999 by Tandem-Flow Systems, Ltd.
All rights reserved

Area/Symptom	***Problem***	***Cure***
Dry Feed Hopper / J-Box Feed (cont.)		
Towel Twisting leaving J-Box	Not enough towels in J-Box	See "Towel too tight leaving J-Box" above
	Low water level	Check alignment of spray nozzles in Wash Box Section; there should be sufficient overspray to keep J-Box full to overflow pipe
Wash Box Section		
Towel twisting	Roller bushings or shafts of perforated rollers worn	Replace bushing and/or shaft
Water leaks from spray manifolds	'O'-ring gasket on manifold worn or torn	Replace 'O'-ring gasket
Water leaks from cover	Wash box lid gasket worn or torn	Replace wash box lid gasket
Rinse Section		
Towel twisting	Worn pressure roller	Replace pressure roller
	Seized bearings	Replace bearings
Insufficient rinsing	Supply valve not opening	Verify that AUTOMATIC operation was selected
		Check coil of valve for continuity. Replace if defective
	Water flow insufficient	Check hand valve open to proper flow, adjust as necessary
		Check spray nozzles for obstructions, clean as necessary
Insufficient water extraction	Rinse roller pressure too low	Adjust pressure regulator for Rinse Section pressure rollers

This document copyright 1998, 1999 by Tandem-Flow Systems, Ltd.
All rights reserved

Area/Symptom	***Problem***	***Cure***
Main Drive		
Main drive motor will not start in AUTO	One or more Override valves depressed	Verify that both manual override valves (Rinse Section and Stacker Drive Section) are pulled to the OPERATE position
Guillotine		
Guillotine keeps dropping	Jammed towel in Stacker Drive	Clear towel jam
	Excessive drag on Drying Drums or rollers	Check for water-logged drums (see "Steam Supply" section)
		Check bearings for dirt or lint, clean as required
		Check for defective bearings, replace as necessary
Towel break does not stop machine	Towel break safety switch broken	Repair or replace towel break safety switch
Steam Supply		
Water-logged Drying Drums (drum sounds "dull" when tapped)	Siphon pipe broken or leaking	Remove Rotary Union and inspect Siphon pipe, paying particular attention to the flexible Siphon elbow. Replace any damaged parts
	Steam trap not functioning	Check sight glass for movement of condensate
		Check steam trap for freedom of movement of float
Towel not drying	Steam pressure too low	Check regulator for proper setting
	Steam trap not functioning	Check steam trap for freedom of movement on float
Stacker Drive Unit		
Towel not pulling through	Towel too damp	See "Steam Supply" section
	Towel off-center	Check alignment and tracking of towels on Drying Drums, and adjust as needed
	Pressure roller worn	Replace pressure roller

This document copyright 1998, 1999 by Tandem-Flow Systems, Ltd.
All rights reserved

Stacker Drive Unit (continued)		
Towel not pulling through (continued)	Air pressure too low on pressure roller	Adjust air pressure regulator
	Bearing seized	Replace bearing and any damaged rollers
Rewind Unit		
Towel does not rewind	Common Motor turns, mandrel does not turn	Check Rewind relay engaging
		Check Clutch Circuit Breaker (CB5)
		Check clutch power supply fuses (internal)
		Check coil of clutch for open circuit, replace clutch coil if needed.
	Insufficient torque on mandrel	Adjust clutch tension higher
Towel pulls too hard, sometimes breaks	Excessive torque on mandrel	Adjust clutch tension lower
Towel winds unevenly	Towel edge photocell dirty	Clean photocell lens with clean, damp cloth
	Wrong photocell selected	Check that photocell selector switch is set for the width towel being rewound
	Clutch tension set too high	Adjust clutch tension lower
	Insufficient tension on towel	Check that towel passes over/under all rollers and shafts of Stacker Chute
		Check condition of rubber towel tension flap, replace as necessary
Pump		
Pump pressure low	Pump impellers clogged	Clean impellers
Pump pressure too high	One or more spray jets clogged	Clean or replace affected jets
		Check for tears in filter screen
Pump will not start	Insufficient water in tank	Check water level in Pump Water Tank, fill as needed

This document copyright 1998, 1999 by Tandem-Flow Systems, Ltd.
All rights reserved

Area/Symptom	***Problem***	***Cure***
Filter		
Too much water in Lint collection box	Filter screen clogged	Clean filter screen with brush per filter manual
(Consult filter manual for other problems		
Sewing Machine		
Stitching does not chain off properly	Operator pulling stitched area too soon	Retrain operator
	Needle worn or broken	Replace needle
	Looper worn or broken	Replace looper
	Sewing machine not lubricated sufficiently	Check level of oil in attached lubricator
		Oil machine using lubricator
	Thread not clean and dry	Replace thread spool with clean, dry spool
Cutter not cutting cleanly	One or both cutting knives worn or loose	Check that knife screws are tight
		Check for dull or chipped edge on knife blades, replace as needed
(Consult sewing machine manual for other problems)		
Third Arm		
Third arm does not return	Tension spring (internal) or lock pin broken	Replace broken part
Soap Dispenser		
No soap injected	Soap supply valve turned off	Turn hand valve to ON position
	Supply tank empty	Refill soap tank
	Soap supply line blocked	Clean soap supply line to clear obstruction
Wrong amount of soap injected	Level tube misadjusted in Soap Dispenser	Adjust tube up / down to increase / decrease soap injected for each towel

This document copyright 1998, 1999 by Tandem-Flow Systems, Ltd.
All rights reserved

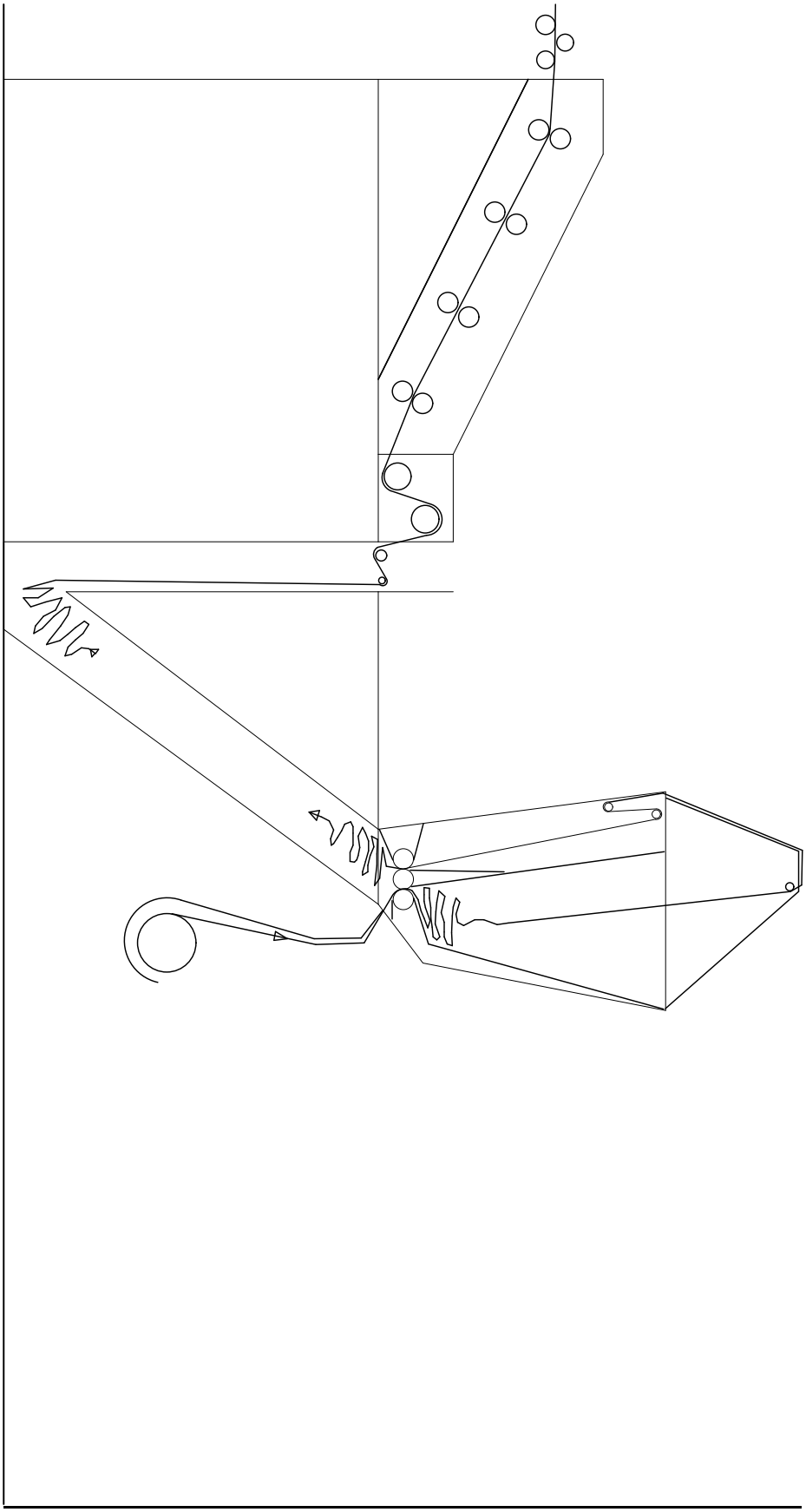

This document copyright 1998, 1999 by Tandem-Flow Systems, Ltd.
All rights reserved

Drum Threading

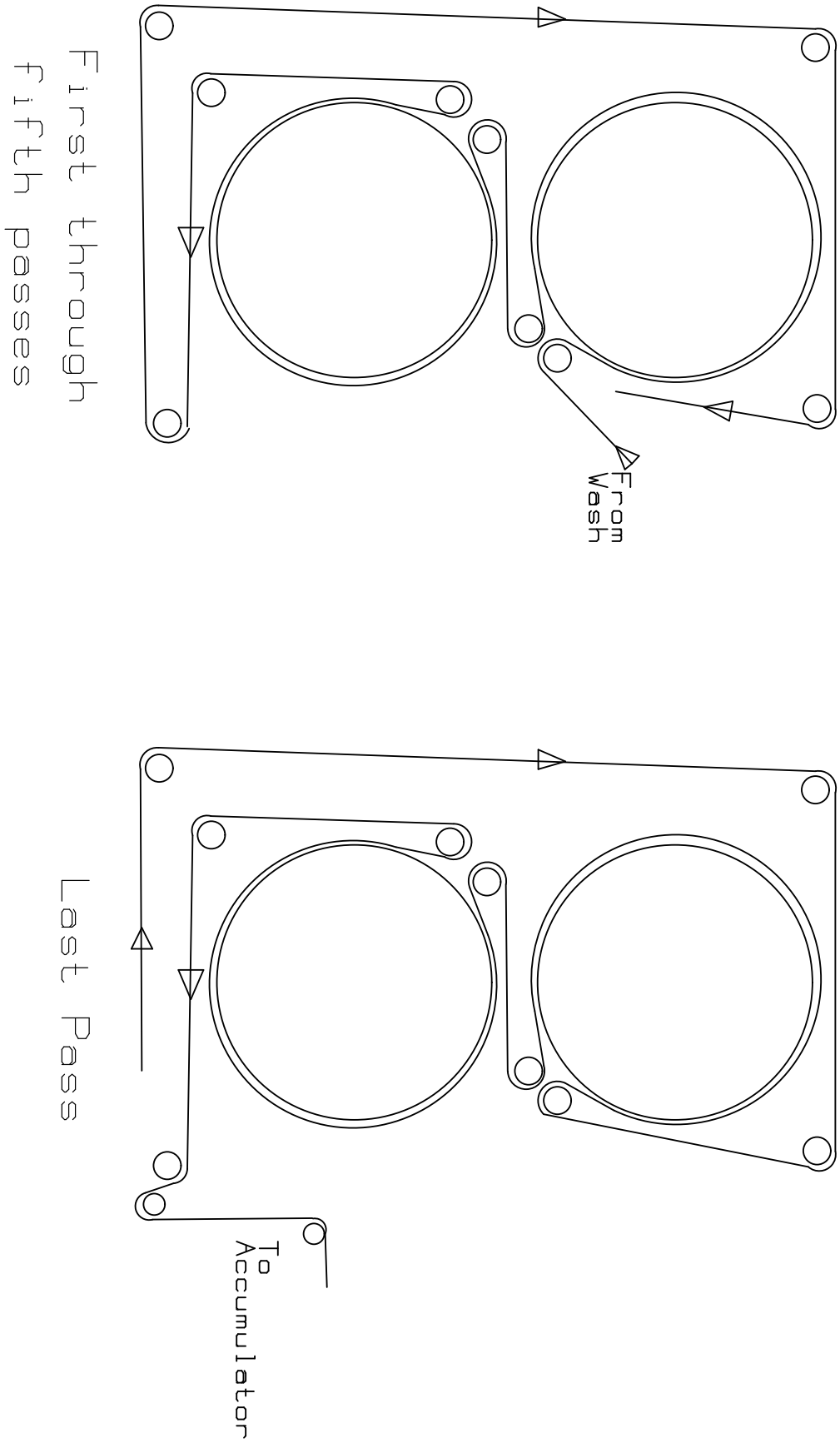

This document copyright 1998, 1999 by Tandem-Flow Systems, Ltd.
All rights reserved

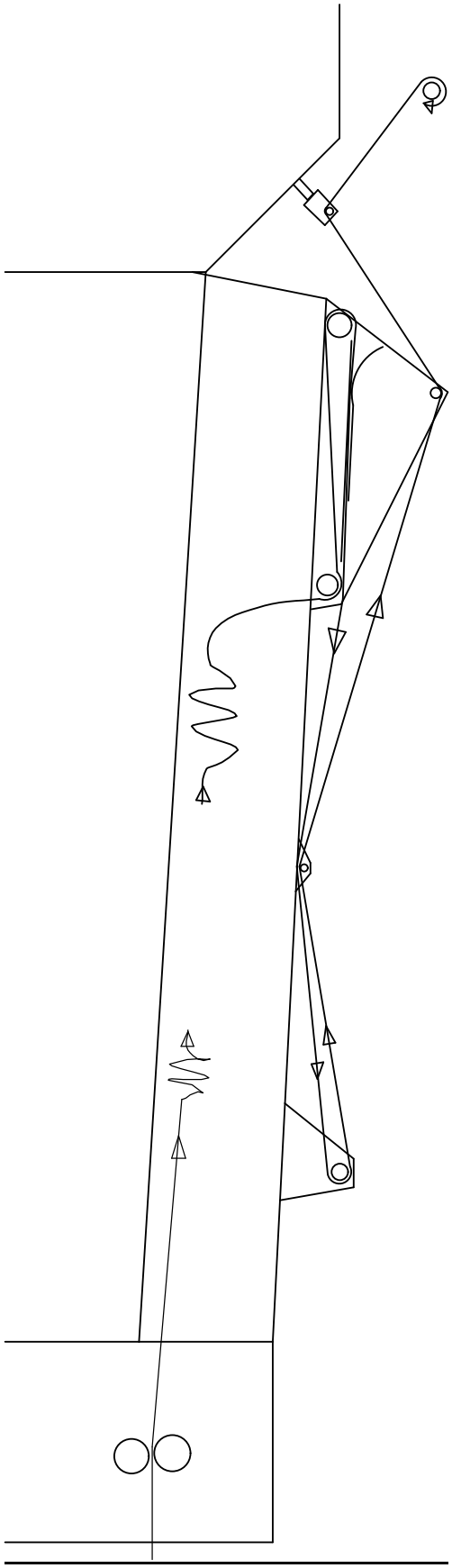

This document copyright 1998, 1999 by Tandem-Flow Systems, Ltd.
All rights reserved

PARTS DESCRIPTIONS

The following pages detail the parts of the Roll Towel Machine by section, with part numbers and descriptions. It does not attempt to list all fittings, bolts, nuts or other fasteners, but only the items normally replaced due to wear or breakage, and the quantity of each used in a particular section.

Following this section of the manual, you will find schematics for the electrical and air sections of the machine.

This document copyright 1998, 1999 by Tandem-Flow Systems, Ltd.
All rights reserved

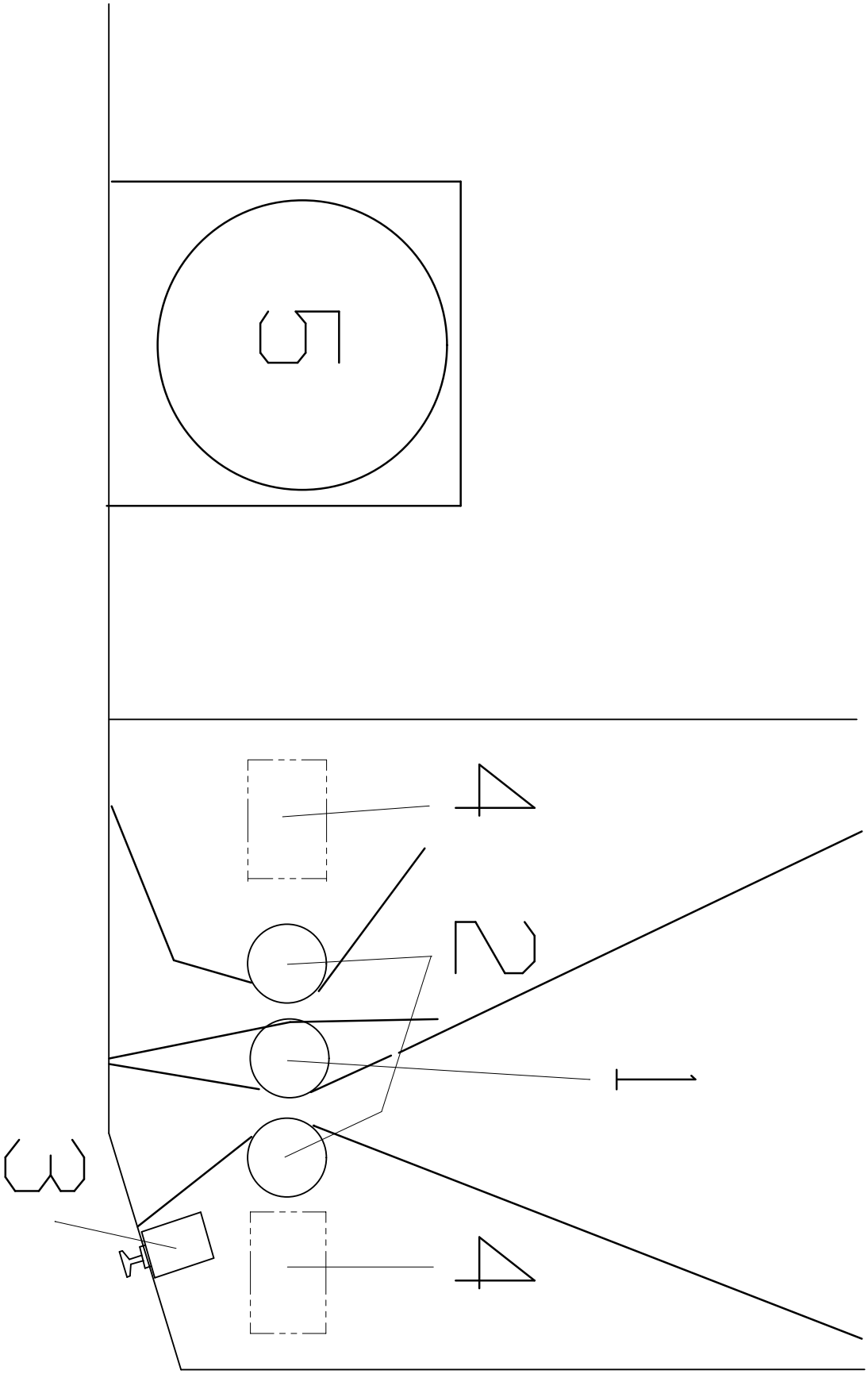

This document copyright 1998, 1999 by Tandem-Flow Systems, Ltd.
All rights reserved

Dry Feed Hopper Assembly

Item #	Quantity	Part Number	Description
1	1	8060A	Grooved bolster roll
	2	7707	Flanged bearing 1”
	2	40B17 x 1”	Drive sprocket
2	2	7913	Grooved pressure roll
	4	220-00000-30	Bearing
3	1	3682A	Microswitch
4	2	8163A	Pressure cylinder
5	1	7725AN	Common Motor, 2HP
	1	40B33 x .875”	Drive sprocket
	2	#40 chain	Drive chain

This document copyright 1998, 1999 by Tandem-Flow Systems, Ltd.
All rights reserved

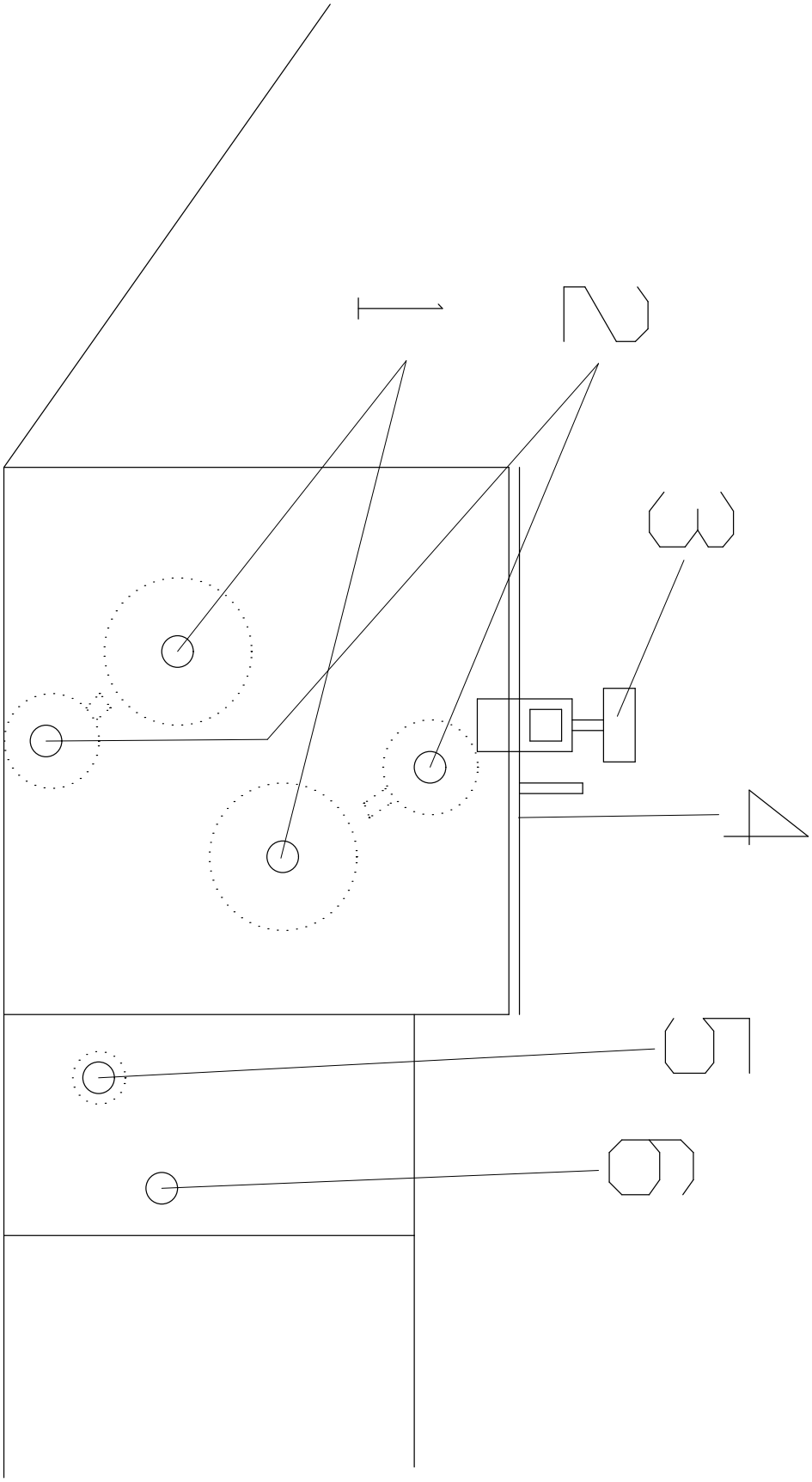

This document copyright 1998, 1999 by Tandem-Flow Systems, Ltd.
All rights reserved

J-Box (Soak Tank) and Wash Box

Item #	Quantity	Part Number	Description
1	2	8020A	Perforated Roller Assembly
	2	8020R	Perforated Roller only
	4	8766	Bushing for Perforated Roller
	2	8767	Shaft for Perforated Roller
2	2	8782	Spray Header Assembly
	2	33001	Spray Header only
	20	8725V	Spray Jet only
	2	8796	'O' Ring for Spray Header
	1	33007W	Welded Manifold Assembly
	2	33034	Lock bolt for Spray Header
	2	33004	Lock bolt mounting plate
3	1	33011	Clamp Bar for Wash Box Lid
	2	33012	Clamp Bar Latch
4	1	33013	Wash Box Lid with gasket
5	1	7789	J-Box Control Roller
	2	8766	Bushing for J-Box Control Roller
6	1	7163	Guide Shaft

This document copyright 1998, 1999 by Tandem-Flow Systems, Ltd.
All rights reserved

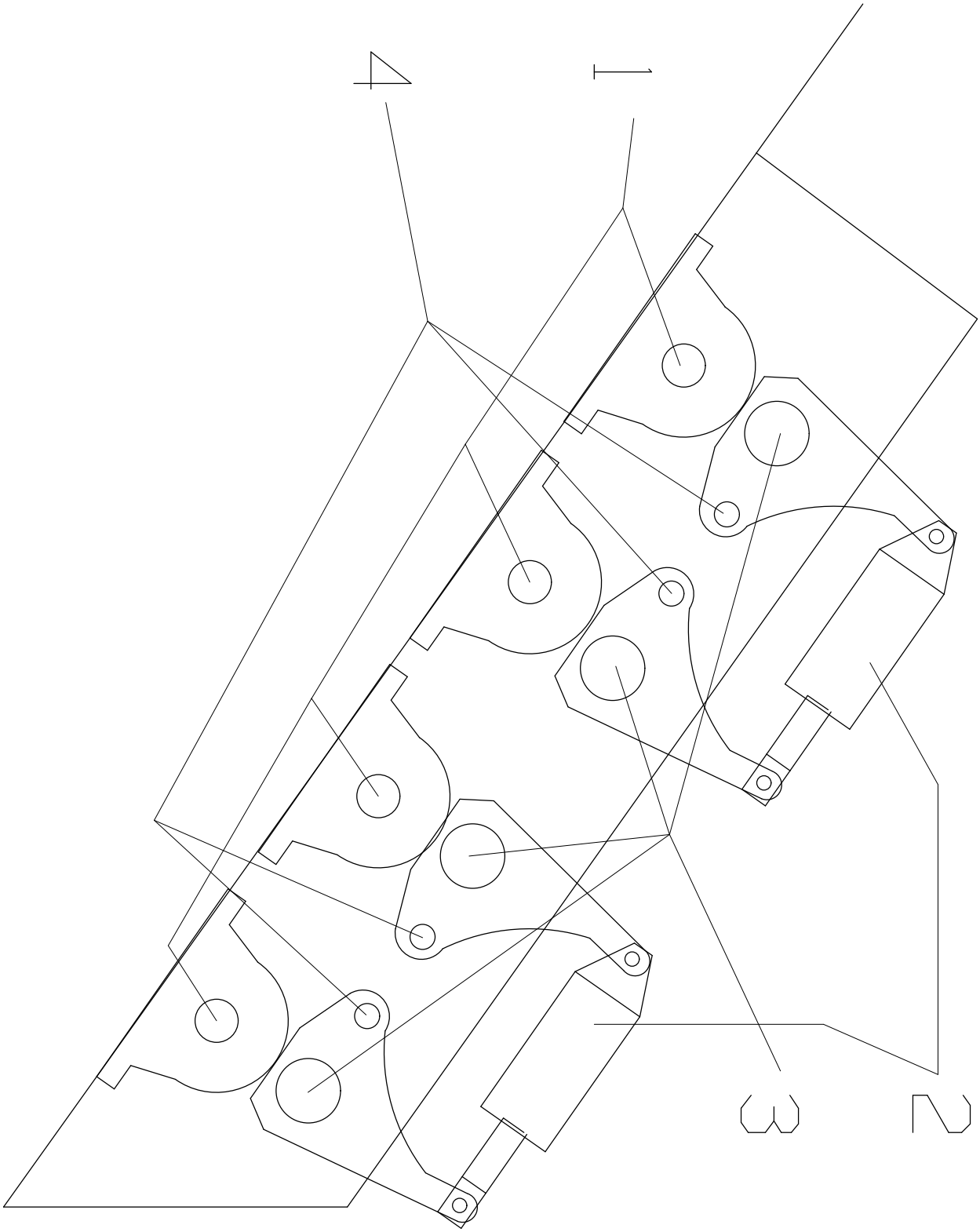

This document copyright 1998, 1999 by Tandem-Flow Systems, Ltd.
All rights reserved

Rinse Section

Item #	Quantity	Part Number	Description
1	4	7104	Rinse Section Bolster Roller
	8	7105	Bearing for bolster roller
2	4	7443A	Pressure Roller Air Cylinder with mounting brackets
3	4	7129	Rinse Section Pressure Roller
	8	5435	Bearing
	8	8075A	Pressure Roller Lever
	8	7366	Seal for bearing
	8	7649	Inner Bearing Cover Plate
	8	7133	Outer Bearing Cover Plate
4	4	7743R	Reinforcement bar
	8	7743S	Roller Lever Pivot
	8	7127	Bushing for Roller Lever
Not shown	4	VJ15	Rinse spray jets
	1	33301	Rinse spray tube

This document copyright 1998, 1999 by Tandem-Flow Systems, Ltd.
All rights reserved

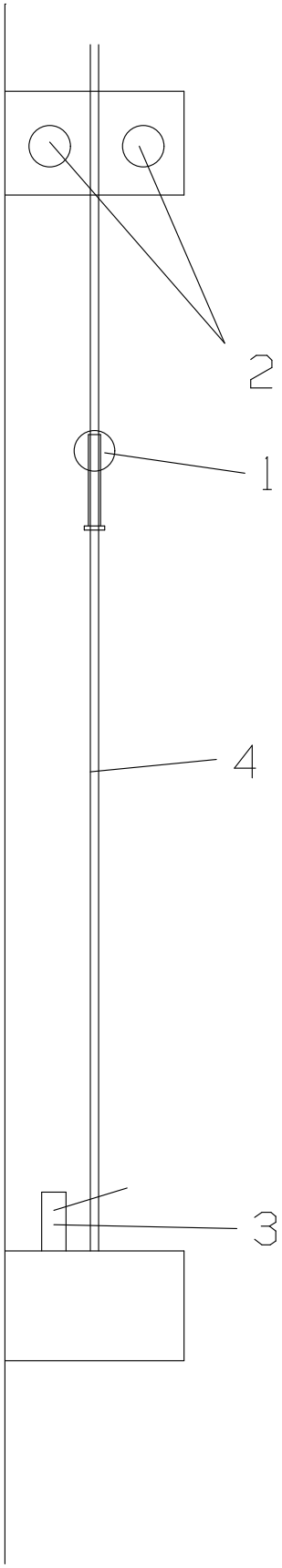

This document copyright 1998, 1999 by Tandem-Flow Systems, Ltd.
All rights reserved

Guillotine

Item #	Quantity	Part Number	Description
1	1	9027	Guillotine Slide Assembly
	1	7793	Roller Only
	2	5386	Bearing for Roller
	1	7793S	Shaft for Roller
	1	9223	Left Hand Slide Bracket
	1	9224	Right Hand Slide Bracket
2	2	7792	Fixed Roller Only
	4	5386	Bearing for Roller
	2	7792S	Shaft for Fixed Roller
3	1	31601W	Towel Break Safety Switch
4	2	9181	Guide Rod for Guillotine
	6	7634	Bumper Ring (at base)

This document copyright 1998, 1999 by Tandem-Flow Systems, Ltd.
All rights reserved

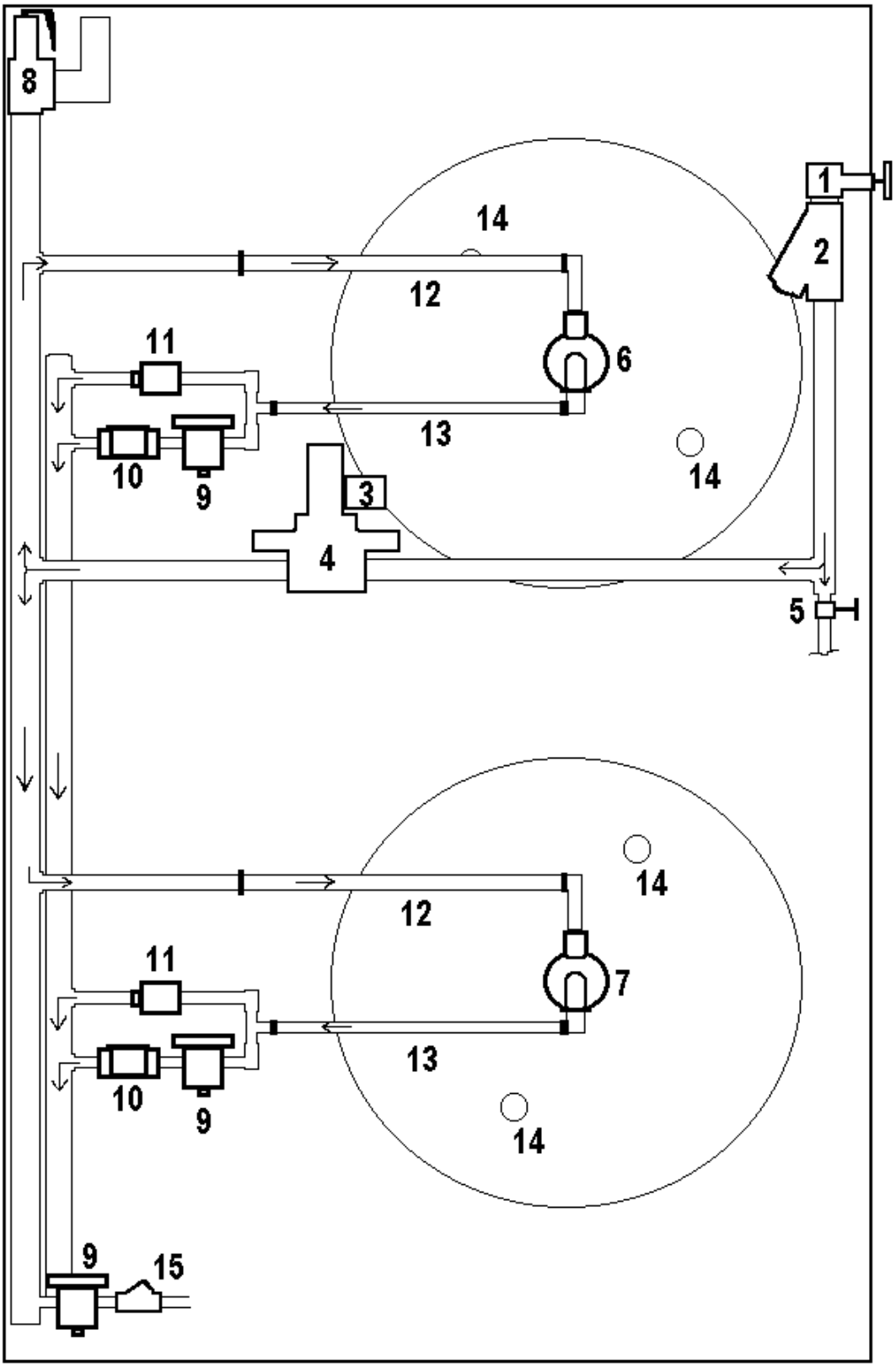

This document copyright 1998, 1999 by Tandem-Flow Systems, Ltd.
All rights reserved

Steam Equipment

Item #	Quantity	Part Number	Description
1	1	19500	2” Main Steam Valve
2	1	24600	2” Strainer
3	1	196-00000-88	1” Electric Solenoid
4	1	5927R	1” Steam Regulator
5	1	195-00000-99	3/4” Steam Valve
6	1	9129	Right Hand Rotary Union
7	1	9028	Left Hand Rotary Union
8	1	5446	2” Pressure Relief Valve Set for 100 PSI
9	3	6321A	3/4” Armstrong 800 Bucket Steam Trap
10	2	8684F	3/4” Sight Glass
11	2	7344A	1/2” Armstrong Air Vent
12	2	3/4” x 28”	Flexible Steam Hose
13	2	3/4” x 18”	Flexible Steam Hose
14	4	7834V	Vacuum Relief Valve (opposite side of drum)
15	2	7380A	3/4” Check Valve
Not Shown	1	33042	3/4” Temperature Regulator
	2	37800	1/2” Steam Heater nozzle

This document copyright 1998, 1999 by Tandem-Flow Systems, Ltd.
All rights reserved

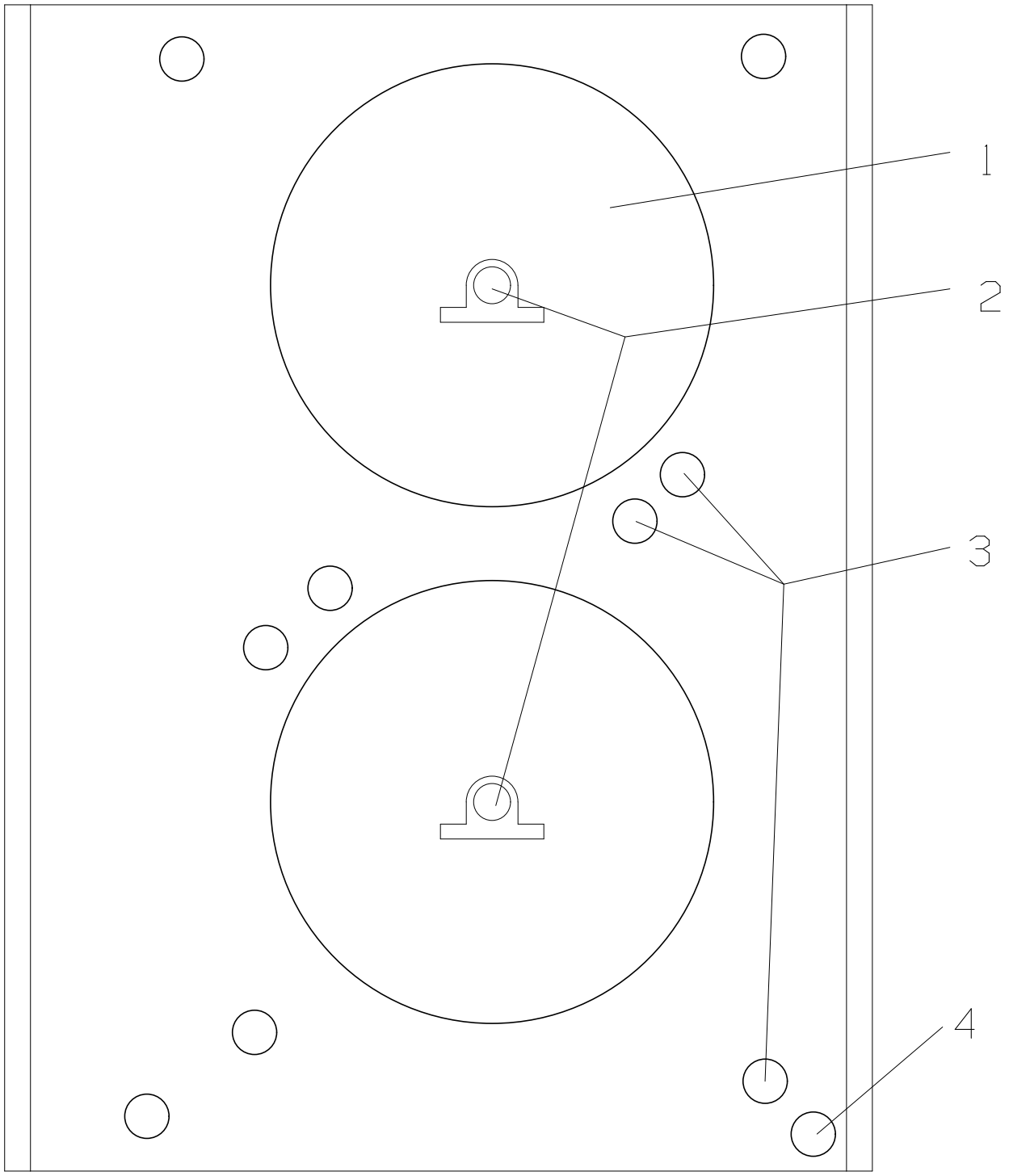

This document copyright 1998, 1999 by Tandem-Flow Systems, Ltd.
All rights reserved

Drying Drums and Rollers

Item #	Quantity	Part Number	Description
1	2	6050A	Drying Drum
2	4	9022	2.5” Bearing for Drying Drum
3	9	9025	Long Guide Roller Assembly
	18	5435	Bearing for Roller
	9	8689	Shaft only for Guide Roller
	18	7366D	Seal for Bearing
4	1	5450	Short Guide Roller Assembly
	2	5435	Bearing for Roller
	2	7366D	Seal for Bearing

This document copyright 1998, 1999 by Tandem-Flow Systems, Ltd.
All rights reserved

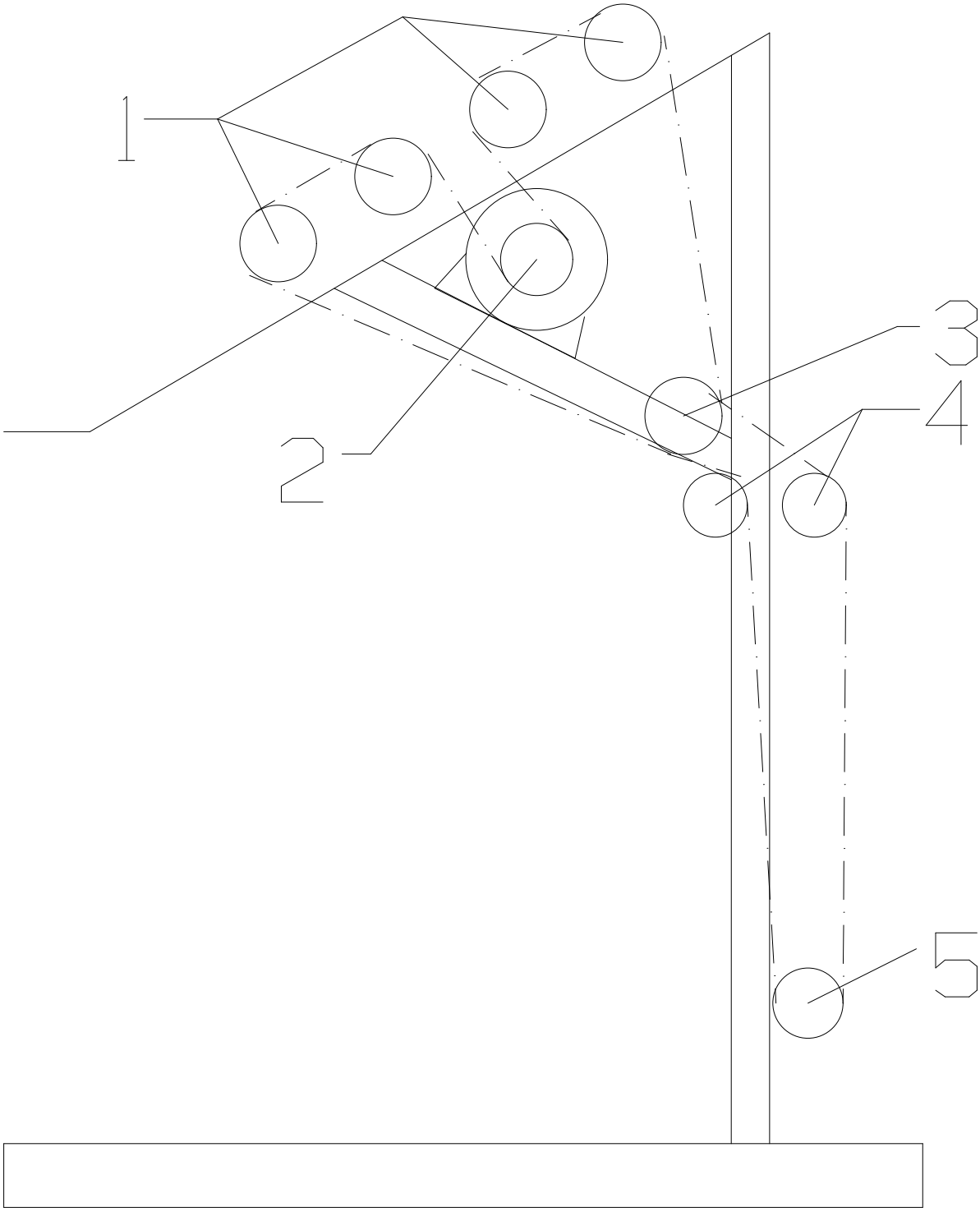

This document copyright 1998, 1999 by Tandem-Flow Systems, Ltd.
All rights reserved

Main Drive Components

Item #	Quantity	Part Number	Description
1	4	60B25 x 1”	Bolster roll sprockets
2	1	8795A	Main drive motor
		60B21 x 1.625”	Motor sprocket
3	1	9095	Dual sprocket with bearing
	2	220-00000-01	Bearing for sprocket
	1	8716A	Sprocket mount
4	2	8035	Idler sprocket
	2	8716B	Sprocket mount
5	1	40B30 x 1”	Auxiliary drive sprocket
	2	7707	Flanged bearing 1”
	2	7620	Universal joint 1”
	2	7620C	Cover for 7620

This document copyright 1998, 1999 by Tandem-Flow Systems, Ltd.
All rights reserved

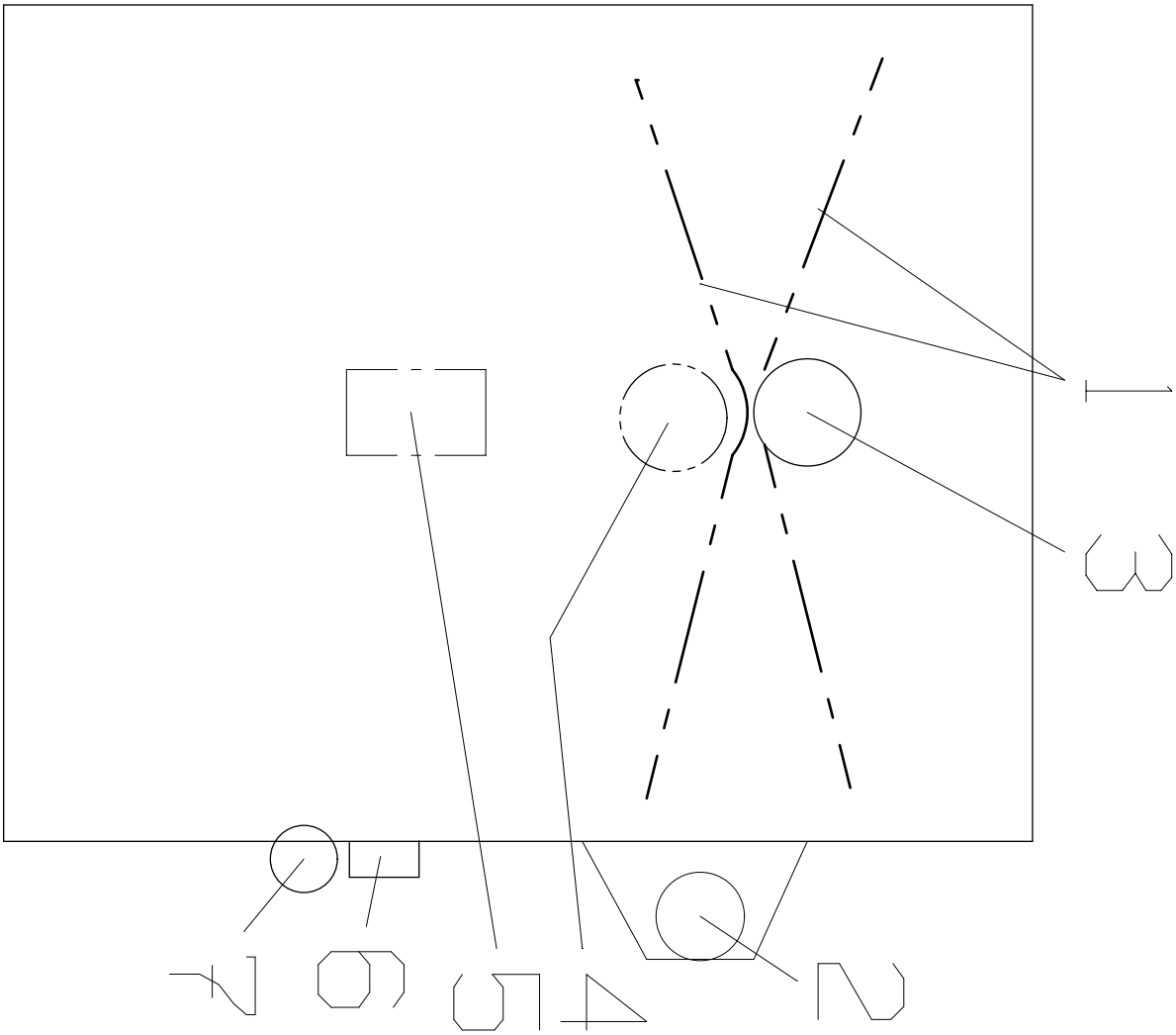

This document copyright 1998, 1999 by Tandem-Flow Systems, Ltd.
All rights reserved

Accumulator Drive Assembly

Item #	Quantity	Part Number	Description
1	12	8932AH	Stripper bars
2	1	7792	Fixed Roller
	2	5386	Bearing for roller
	1	7792S	Shaft for Fixed Roller
3	1	8839A	Accumulator drive roll
	2	7707	Flanged bearing 1”
4	1	7913	Grooved pressure roll
	2	220-00000-30	Bearing
5	1	8163A	Pressure cylinder
6	1	195-00000-58	Override control valve
7	1	7453A	Pressure regulator with Gauge

This document copyright 1998, 1999 by Tandem-Flow Systems, Ltd.
All rights reserved

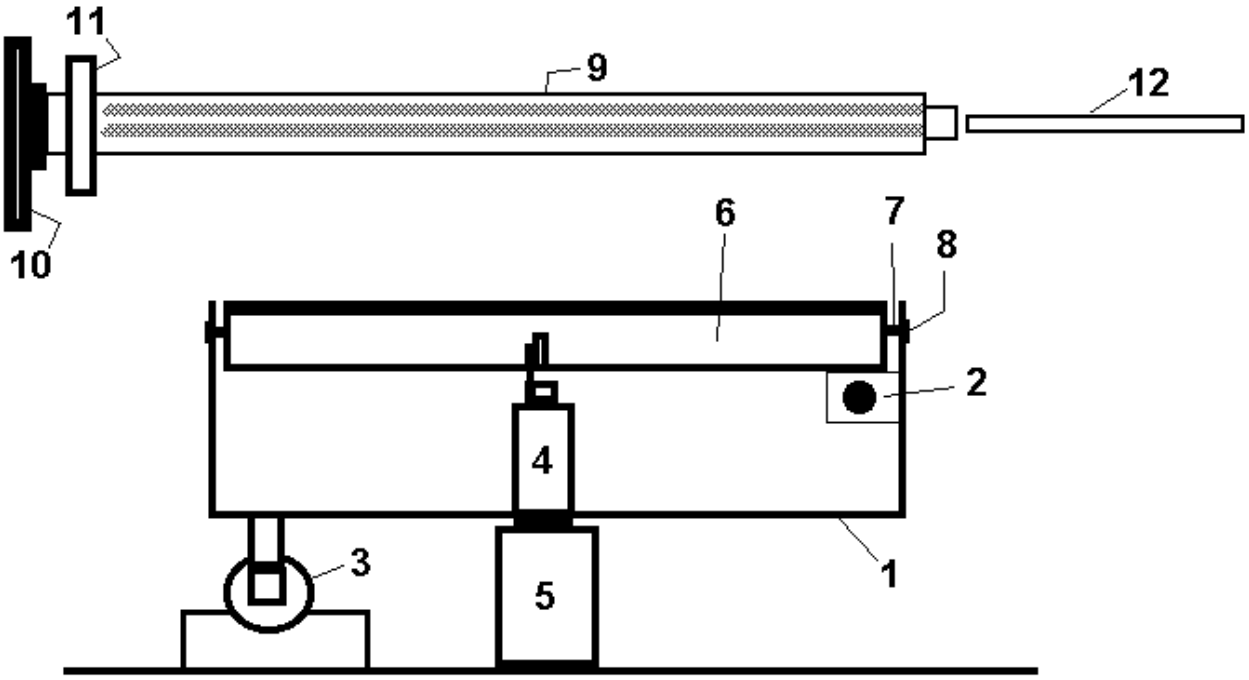

This document copyright 1998, 1999 by Tandem-Flow Systems, Ltd.
All rights reserved

Towel Alignment Assembly

Item #	Quantity	Part Number	Description
1	1		Towel Alignment Assembly Complete
2	1	264-00000-10	Photocell
3	1	7447A	Air Cylinder
4	1	3682A	Towel End Detector switch
5	2		
6	1	7523	Towel Hold Back Plate
7	2	6426	Pin for hold back plate
8	2	3571	Bushing for hold back plate
9	1	7768A	Rewind Mandrel
10	1	7610	Mandrel Bearing
11	1	5378	Towel Eject Thrust Plate
		8282	Pad only for eject plate
12	1	7864	Third Arm Assembly
	1	7652	Bearing for Third Arm
	1	7324	Spring for Third Arm
Not Shown	1	7504F	Towel Eject Cylinder
	1	7620	Universal Joint
	1	3057744	Clutch, 90 volt
	1	305450	Armature Hub
	1	305381	Armature Plate
	1	1/3HP 300RPM	Gear Motor
	3	218-00000-28	Pillow block bearing
	1	264-00000-11	Photocell

This document copyright 1998, 1999 by Tandem-Flow Systems, Ltd.
All rights reserved

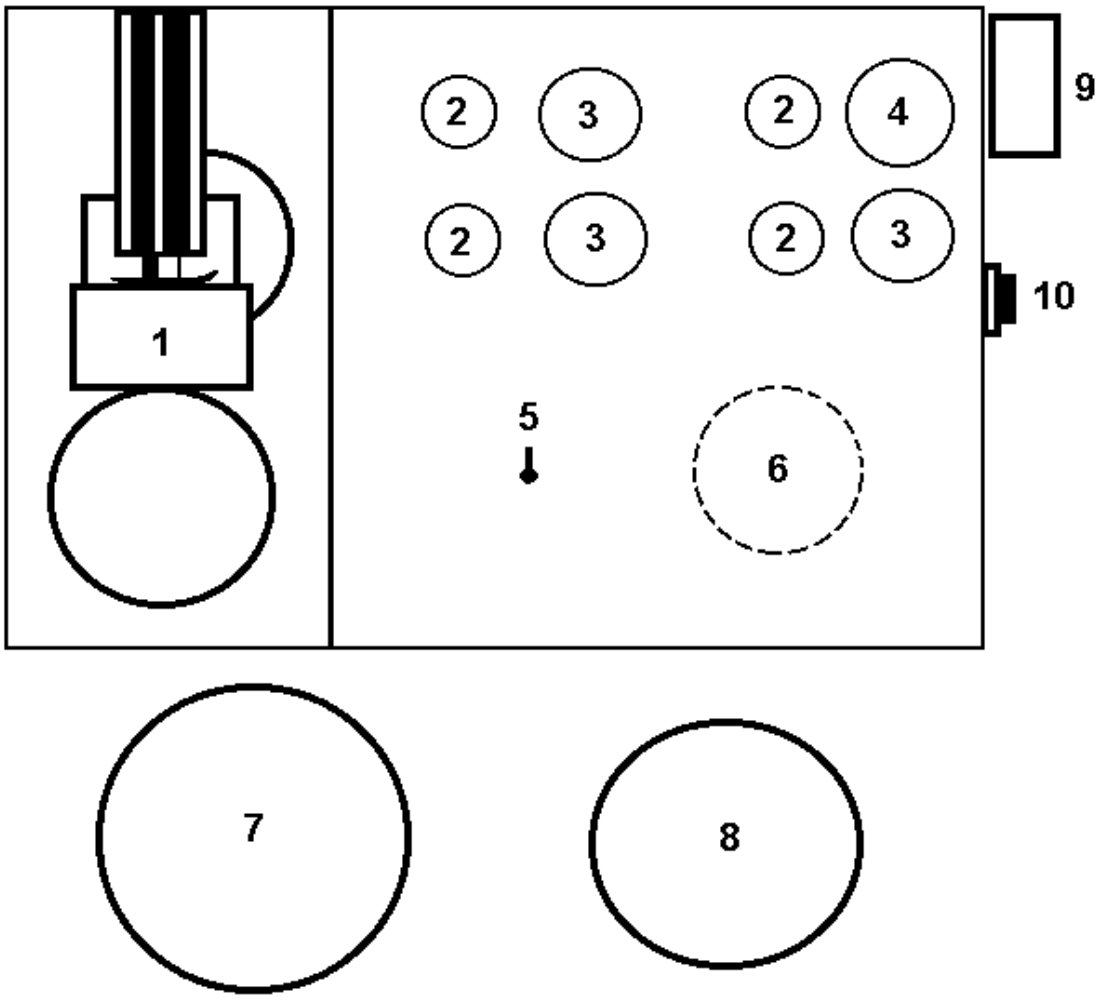

This document copyright 1998, 1999 by Tandem-Flow Systems, Ltd.
All rights reserved

Operator's Console

Item #	Quantity	Part Number	Description
1	1	3636	Fischbein Sewing Machine, Model ECR modified UT
2	6	800TA1D1	Green Push Button switch
3	5	800TD6D2	Red Push Button switch
4	1	800TD6JD2	Oversize Red Push Button switch
5	1	400-00000-11	Toggle switch
6	1	7382A	Clutch Tension Potentiometer (behind panel)
7	1	5959T	Temperature Gauge
8	1	5970	Pump Pressure Gauge
9	1	265-00000-18	Towel Counter
10	1	382-00000-09	Towel Count switch
Not shown	1	800TH2A	2 Position Selector switch

Note: Some push buttons listed here, used only for manual operation, are actually mounted to the electrical cabinet in machines built after July 1, 1996.

This document copyright 1998, 1999 by Tandem-Flow Systems, Ltd.
All rights reserved

Electrical Panel

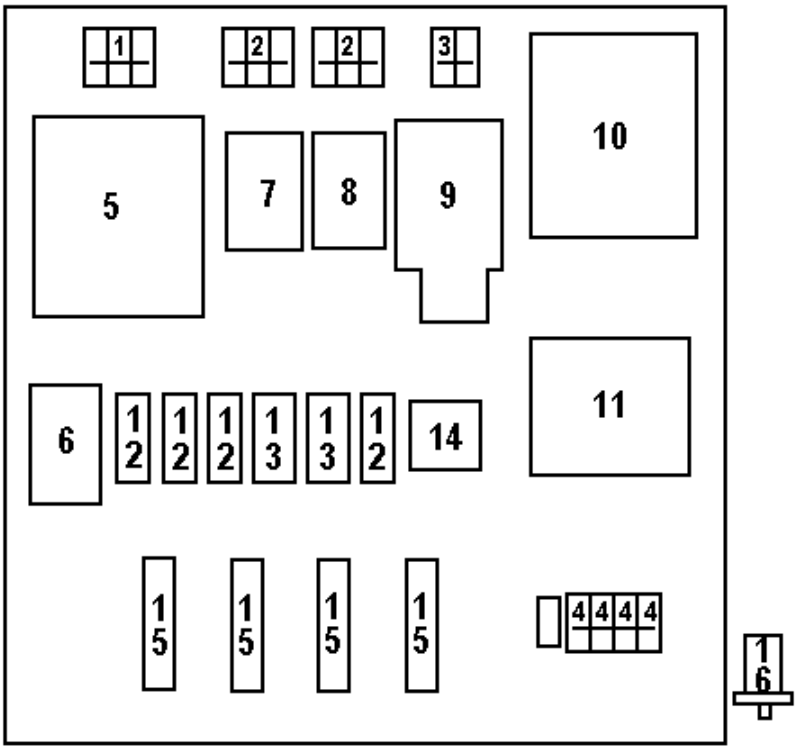

Air Panel

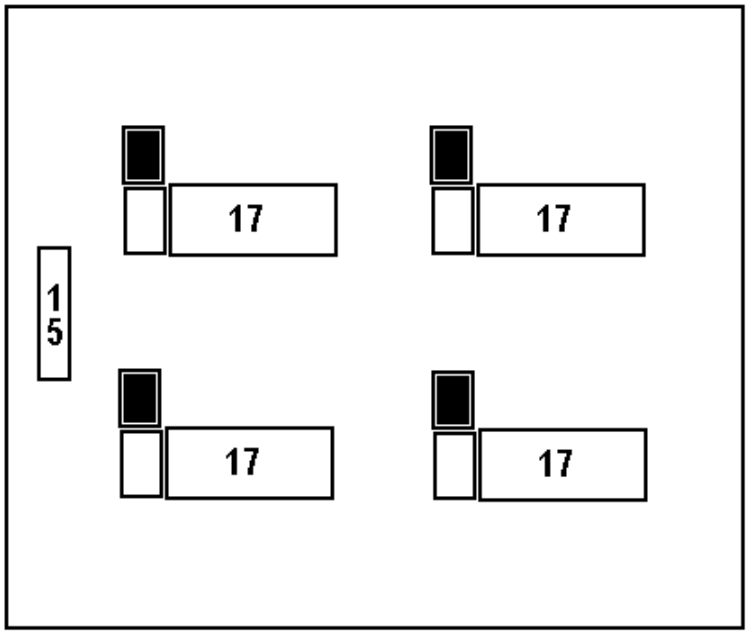

This document copyright 1998, 1999 by Tandem-Flow Systems, Ltd.
All rights reserved

Electrical and Air Panels

Item #	Quantity	Part Number	Description
1	1	1492CB3G100	Allen-Bradley 10 Amp CB
2	2	1492CB3G050	Allen-Bradley 5 Amp CB
3	1	1492CB2G020	Allen-Bradley 2 Amp CB
4	4	1492CB1G050	Allen-Bradley 5 Amp CB
5	1	PC343P7	Variable Freqency Drive
6	1	193BSC10	Allen-Bradley Overload
7	1	100A09ND3	Allen-Bradley Contactor
	1	193BSB22	Allen-Bradley Overload
8	1	100A09ND3	Allen-Bradley Contactor
	1	193BSB42	Allen-Bradley Overload
9	1	100A45ND3	Allen-Bradley Contactor
	1	193CPC30	Allen-Bradley Overload
10	1	FAL36060	Square-D 60 Amp Breaker
	1	9421-LN1	Operations Handle for above
11	1	TA281215	Acme Transformer, 500 VA rating
12	4	K10P11A15-120	Potter & Brumfield 2-pole relay
13	2	KHAU17A12-120	Potter & Brumfield 4-pole relay
14	1	15-20-5	Clutch Power Module (115 volt)
15	5	274679	Terminal Strip
16	1	500-01050-07	Pressure Switch
	1	400-00150-00	Pressure Switch
17	4	196-00000-85	Solenoid Valve (115 volt)
Not Shown	3	7453A	Pressure Regulator w/gauge

This document copyright 1998, 1999 by Tandem-Flow Systems, Ltd.
All rights reserved

Key to Wiring Diagram Functions

1. Common Motor contactor, with overload. Input protected by 5 amp 3 phase circuit breaker.
2. Pump Motor contactor, with overload. Input protected by main power breaker.
3. Main Drive Motor variable-frequency speed controller, with overload. Input protected by 10 amp 3 phase circuit breaker. Controlled by normally-open contact on relay 4R.
4. Filter Motor contactor, with overload. Input protected by 5 amp 3 phase circuit breaker.
5. 500VA transformer, 460 volt to 120 volt. Input protected by 2 amp double circuit breaker.
6. Drum steam valve power. Input protected by 5 amp circuit breaker. Toggle switch on operator's console. Solenoid mounted to steam regulator on rear of machine.
7. J-Box and Rinse water valve power. Input protected by circuit breaker on line 6. Power switched by normally open contact on relay 1R, Master Auto relay (line 22). J-Box solenoid in lower panel, below operator's console, rinse water solenoid mounted at top of rinse section.
8. Sewing machine power. Input protected by 5 amp circuit breaker. Power switched by normally open contact on left-hand foot-operated switch at base of operator's console.
9. Towel Alignment Assembly control. Input protected by circuit breaker on line 8. Power controlled by normally open contact on relay 3R, Rewind relay. Photocell is mounted to Towel Alignment Assembly (Wiggle-Woggle) frame. Solenoid mounted in lower panel, below operator's console.
10. Reset/Emergency Stop control. Reset and Emergency Stop buttons mounted to operator's control console. Holding contact is normally open auxiliary contact on 1M, Common Motor contactor (line 13).
11. Safety Interlocks which disable power to machine. Emergency Stop button mounted to rear of Drying Drum Section. Stacker Drive Cover and Towel Feed limit switches protect their respective covers from being opened while machine is operating. Towel Break switch, mounted to Guillotine assembly at end of Rinse Section, stops machine in the event of a towel breaking.
12. Overload contacts. Normally closed contacts of all four motor contactor overloads, to shut down machine in the event of excess current to any motor.
13. Common Motor contactor, 1M. Controlled by Reset/Emergency Stop buttons (line 10), safety interlocks (line 11) and overload contacts (line 12). Power to remainder of panel supplied through auxiliary contact (line 10).
14. Towel Eject solenoid power. Power switched by normally open contact on right-hand foot-operated switch at base of operator's console. Solenoid mounted in lower panel, below operator's console.
15. Towel Feed Air solenoid power. Input protected by 5 amp circuit breaker. Power switched by normally open contact on 2R, Towel Feed Relay (line 16). Solenoid mounted in lower panel, below operator's console.
16. Towel Feed relay, 2R. Towel Feed On and Off buttons mounted to operator's control console. Holding contact is normally open contact on 2R, Towel Feed relay. Normally closed contact on 5R, Photocell relay (line 17), used to stop feed when towel bin is empty.

This document copyright 1998, 1999 by Tandem-Flow Systems, Ltd.
All rights reserved

17. Photocell relay, 5R. Relay is controlled by photocell mounted in Towel Feed bin. Normally closed contact controls Towel Feed relay 2R (line 16).
18. Rewind relay, 3R. Rewind On and Off buttons mounted to operator's control console. Holding contact is normally open contact on 3R, Rewind relay. Normally open contact on 6R, Rewind Safety relay, can interrupt power if operator blocks photocell on rewind assembly. Normally closed contact on End of Towel switch, mounted to Towel Alignment Assembly, used to stop rewind when seam is encountered on towel being rewound. Controls power from Clutch module (line 19) to clutch assembly on rewind shaft.
19. Clutch module, CM. Input protected by 5 amp circuit breaker. Clutch module converts 120 volts AC to 90 volts DC for clutch assembly. DC voltage is controlled by 150 watt Potentiometer on operator's control console, to adjust clutch tension. Power to clutch is switched by normally open contact on 3R, Rewind relay (line 18).
20. Rewind Safety photocell and relay. Photocell projects a beam across rewind area, and opens circuit in Rewind relay (line 18) if beam is broken.
21. Hand/Auto switch. This two-way selector switch, mounted to the electrical panel box, controls whether the Main Drive and Pump motor contactors are controlled individually, or together.
22. Master Auto relay, 1R. Master Auto relay controls the Main Drive, Pump and Filter motor contactors when the Hand/Auto switch is in the "Auto" position (lines 24 and 26). Holding contact is a normally open contact on 1R, Master Auto relay. Three pressure switches provide protection for the pump from inadequate water (normally open Water Level Safety) and prevent starting the machine (or stop it if already running) if the Rinse Section or Stacker Drive Pressure Rollers are released, using the manual valves next to the respective rollers.
23. Main Drive manual control. When the Hand/Auto switch is in the "Hand" position, the Main Drive On and Off switches, mounted on electrical panel box, start and stop the Main Drive. Holding contact is a normally open auxiliary contact on 3M, Main Drive Contactor.
24. Main Drive automatic control. When the Hand/Auto switch is in the "Auto" position, a normally open contact on 1R, Master Auto relay (line 22), controls the Main Drive motor. A short delay is provided by the Delay module, to allow the Pump to come up to speed before starting the main drive.
25. Pump and Filter manual control. When the Hand/Auto switch is in the "Hand" position, the Pump On and Off switches, mounted on electrical panel box, start and stop the Pump and Filter motors. Holding contact is a normally open auxiliary contact on 2M, Pump Contactor. The Pump and Filter contactors operate together.
26. Pump and Filter automatic control. When the Hand/Auto switch is in the "Auto" position, a normally open contact on 1R, Master Auto relay (line 22), controls the Pump and Filter motors.

This document copyright 1998, 1999 by Tandem-Flow Systems, Ltd.
All rights reserved

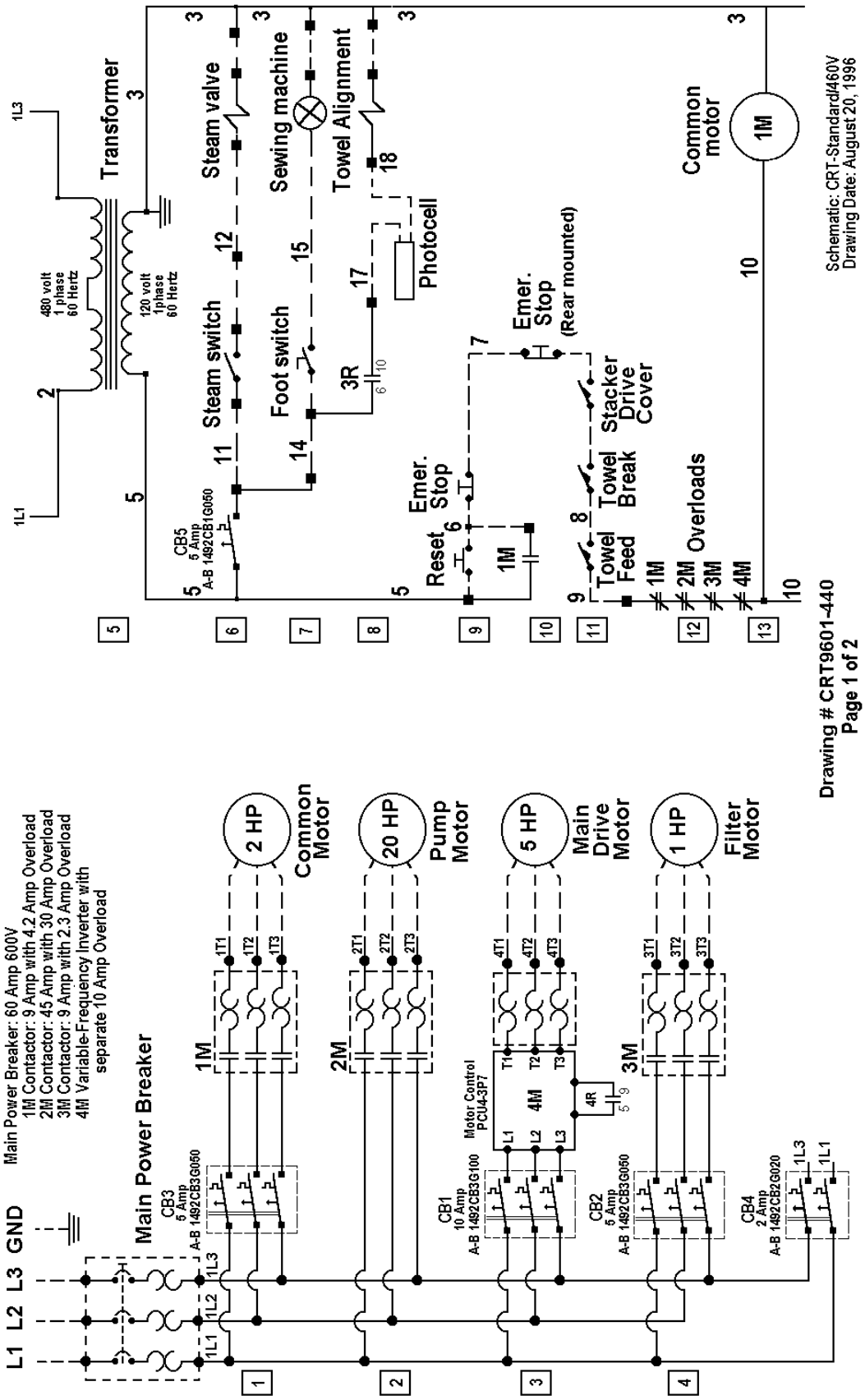

This document copyright 1998, 1999 by Tandem-Flow Systems, Ltd.
All rights reserved

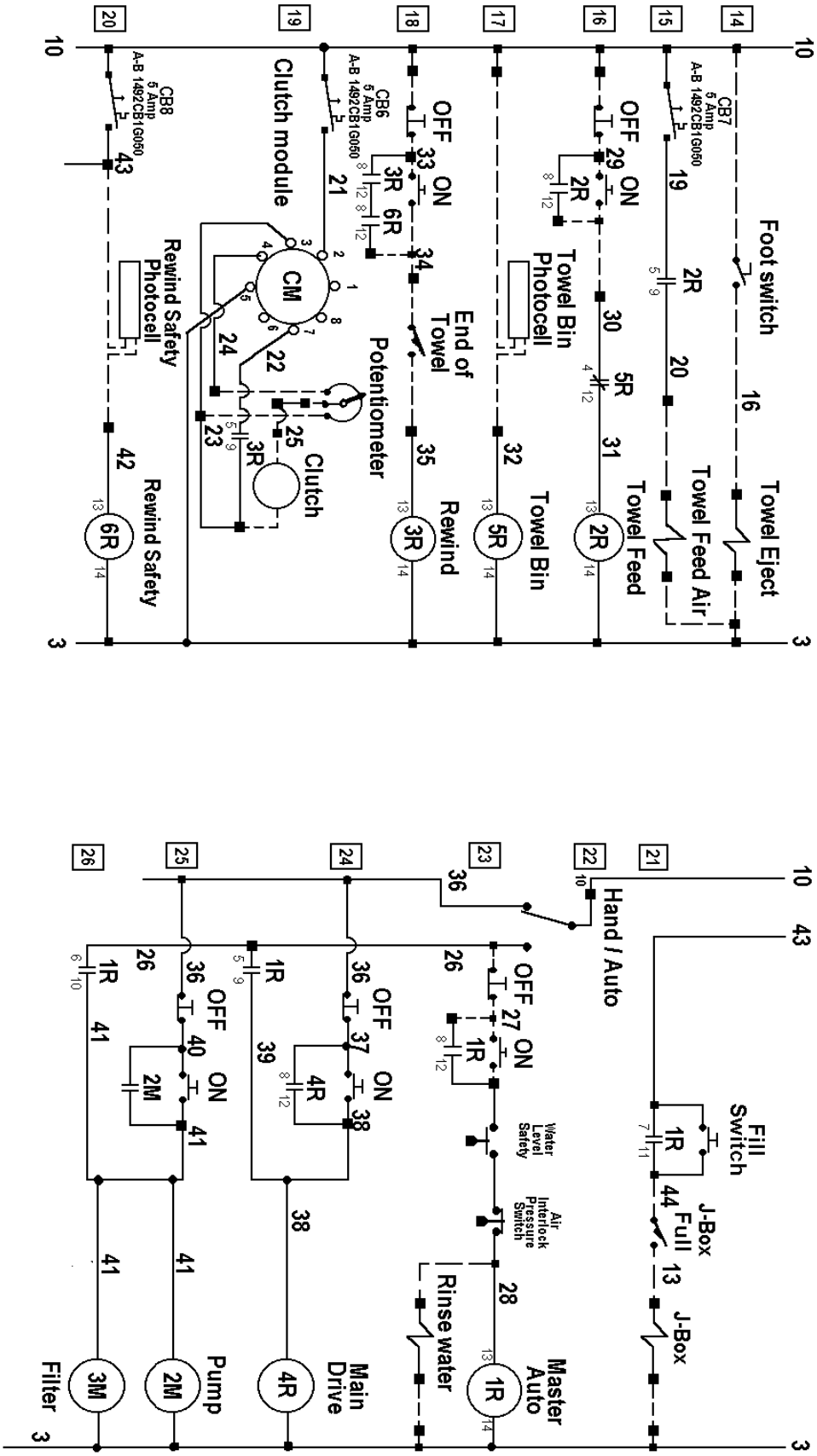

Drawing # CRT9601-440
Page 2 of 2

Schematic: CRT-Standard/460V
Drawing Date: August 20, 1996

This document copyright 1998, 1999 by Tandem-Flow Systems, Ltd.
All rights reserved

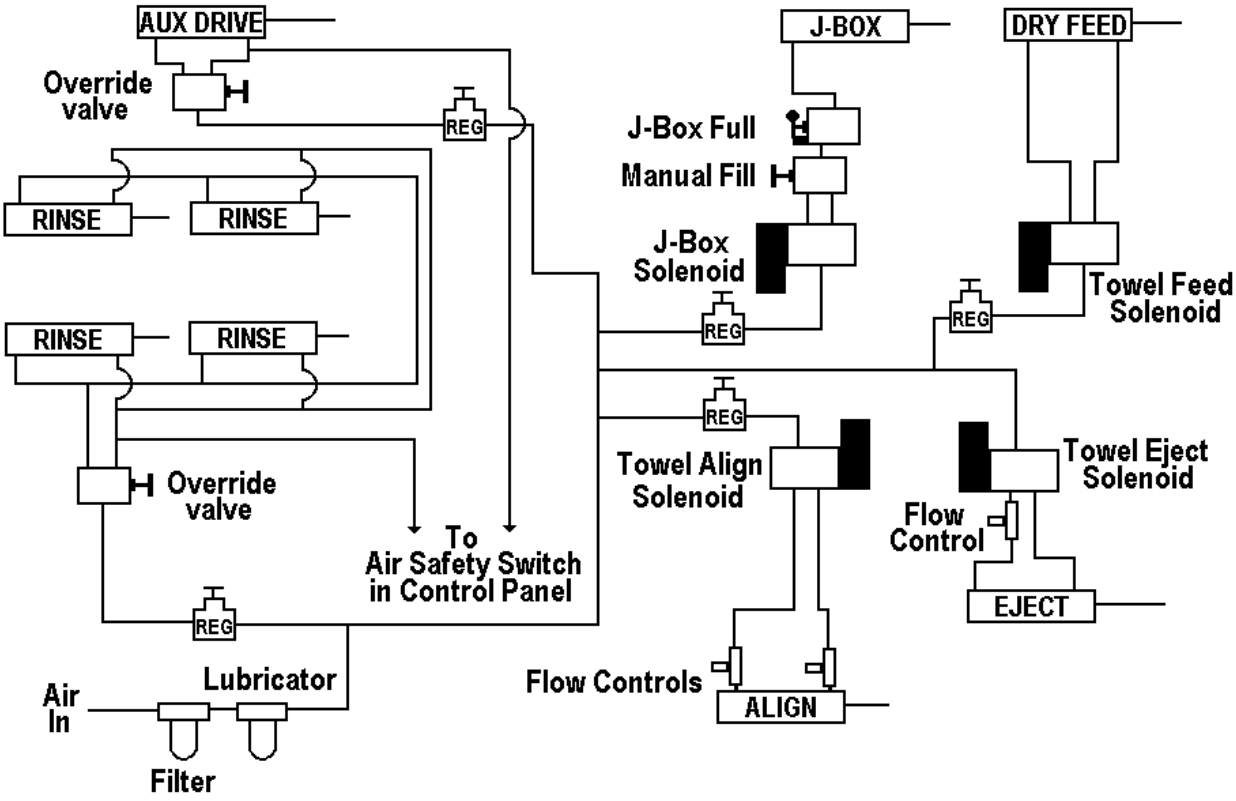

Air Schematic